WeiTeQ

BELT WEIGH FEEDER
WBF - Series

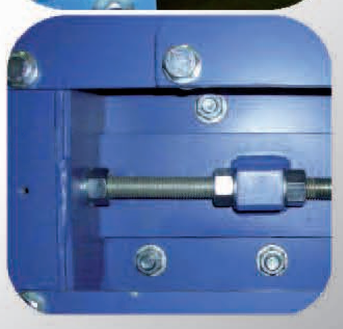

WEITEQ Belt Weigh Feeder
WBF-Series

For feeding a wide range of bulk materials from free flowing to bridging
- High long- and short-term accuracy
- Robust construction allows ease of installation and belt replacement
- Customized feeder sizes, belt type and feed hopper based on bulk material handling experience
- Special solutions for high-accuracy feeding and heavy duty operating condition
- Can be used with different types of feeding equipment and directly at the silo outlet

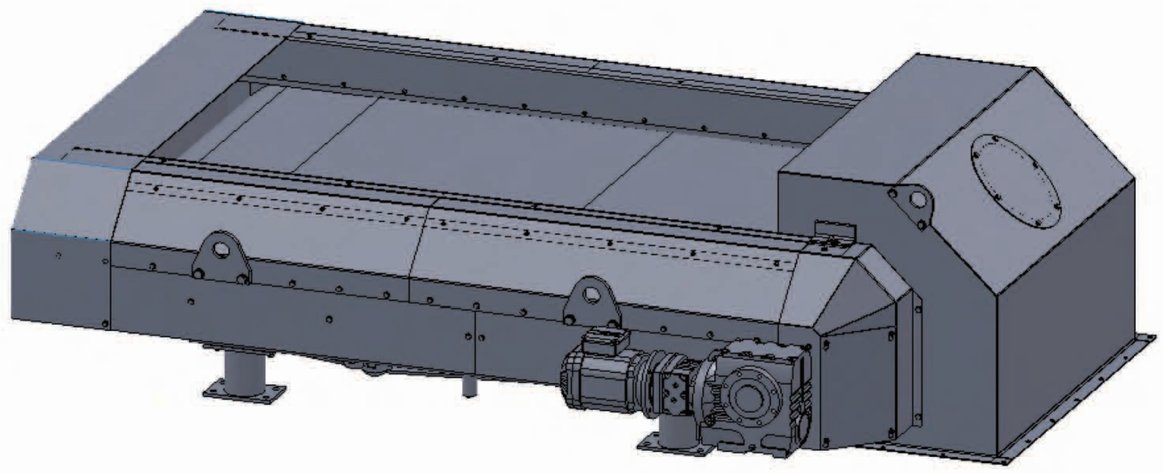

WBF – L
Low Feed Rate

- For light weight powder and dust materials
- Feed rate up to 50 t/h 3 (max. 100 m^3 /h)

WBF – M
Medium Feed Rate

- For a wide range of bulk solids
- Feed rates up to 500 t/h (max. 450m^3 /h)
- For applications with high and medium material loads

WBF – H
High Feed Rate

- For difficult to handle heavy bulk materials, also with problematic characteristics
- Feed rates up to 1500t/h (max. 750m^3 /h)
- For applications with high material loads from silos output

Features

- Stable material feeding
- Batch material
- Pre-feeder control
- Automatic weigh feeder calibration during operation

Application

- Components feeding for blending
- Feeding of additives
- Batch charging
- Wagon and truck loading
- Feeding and control systems for mills, crushers and mixers

Display information

- Actual material feed rate (t/h)
- Totalized weight of material (t)
- Belt loading (kg/m), Belt speed (m/s)
- Material counters, incl. permanent counter
- Calibration setting and check weight functions
- Input/Output parameterization
- Error reports
- Modbus, Profibus DP, Ethernet interface - Option

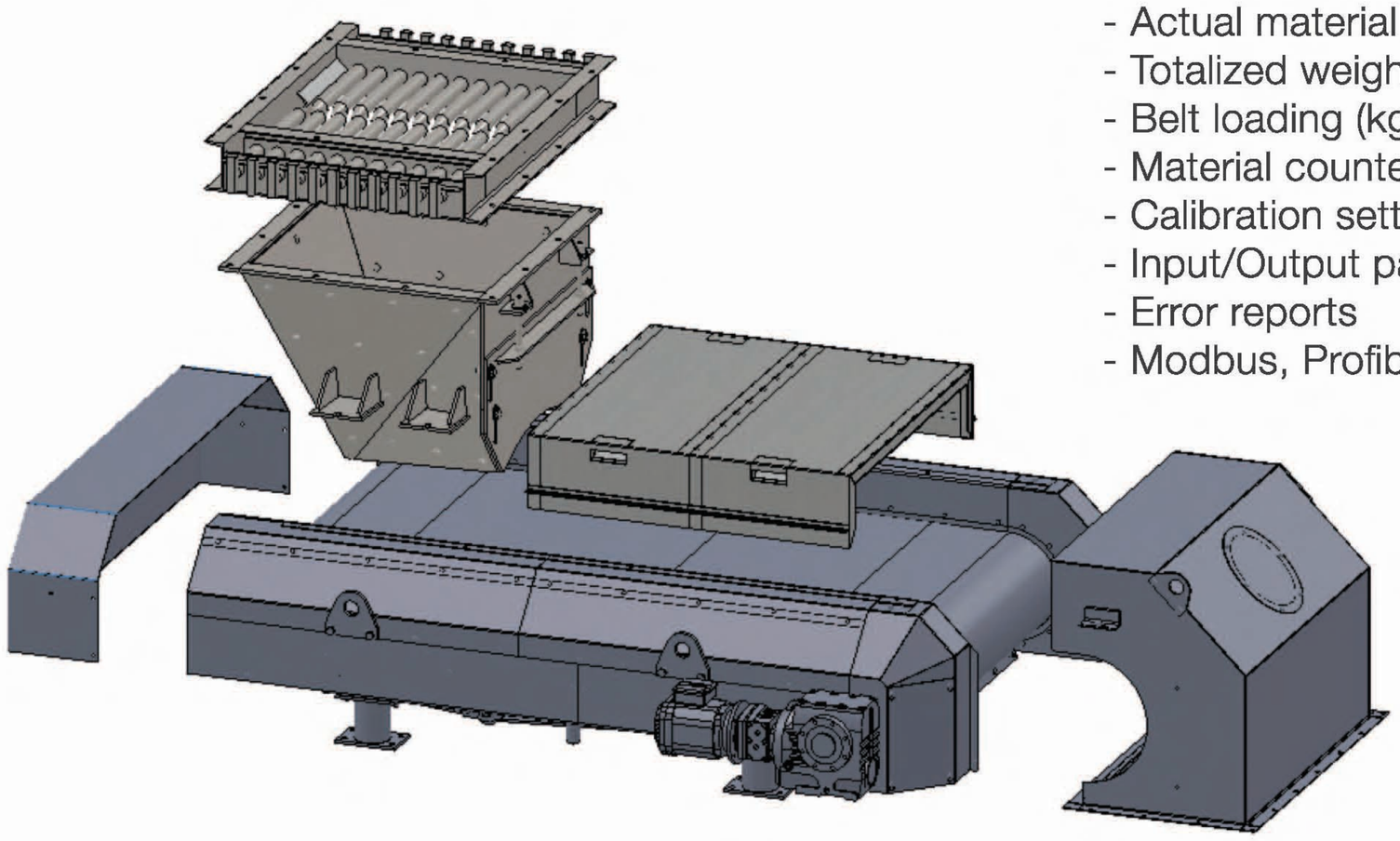

Standard configuration

- Robust conveyor frame, designed for increased torsion and bending stress for heavy duty applications
- Weighing bridge with direct loading on load cells
- All rollers are permanently lubricated
- Gear-motor with speed transducer and frequency converter (integrated or for installation in a cabinet)
- Endless vulcanize weighing belt for material temperature max. 80°C
- Screw tensioning rear pulley for easy belt tension and fast lateral belt exchanging
- Automatic belt centering and tension station
- Cleaning scrapers for pulleys, internal and external belt surface
- Dust protected skirt board and discharge hood with rubber sealing
- Feed hopper for connection to a local silo
- Motor left or right

Options

- Dust covers
- Second weigh bridge
- Belt drift- and slipping sensor
- Options for classified areas
- Rollers and pulleys rubberized
- Local control unit
- Weighing terminal, enclosure IP65

WeiTeQ

Technical Data

WEITEQ TYPE	WBF - L	WBF - M	WBF - H
Belt width (mm)	300 - 1400	800 - 1400	1600 - 2000
Pulley Centres (mm)	from **1500 to...** stepwise **500**	from **2000 to...** stepwise **500**	from **3000 to...** stepwise **500**
Feed rate (m^3/h)	up to **100**	up to **450**	up to **750**
Control range	1:10 / 1:20 / 1:50	1:10 / 1:20 / 1:50	1:10 / 1:20 / 1:50
Accuracy actual value (%)	±0.5 (±**0.25** for special request)	±0.5 (±**0.25** for special request)	±0.5 (±**0.25** for special request)
Bulk density (t/m^3)	0.1 - 1.6	0.5 - 2.5	0.8 - 3.5
Material temperature max.	**+80°C** (Option:**+170°C**)	**+80°C** (Option:**+170°C**)	**+80°C** (Option:**+170°C**)
Operation temperature Protection class	**-25°C** bis **+45°C** IP65	**-25°C** bis **+45°C** IP65	**-25°C** bis **+45°C** IP65

Dimensions

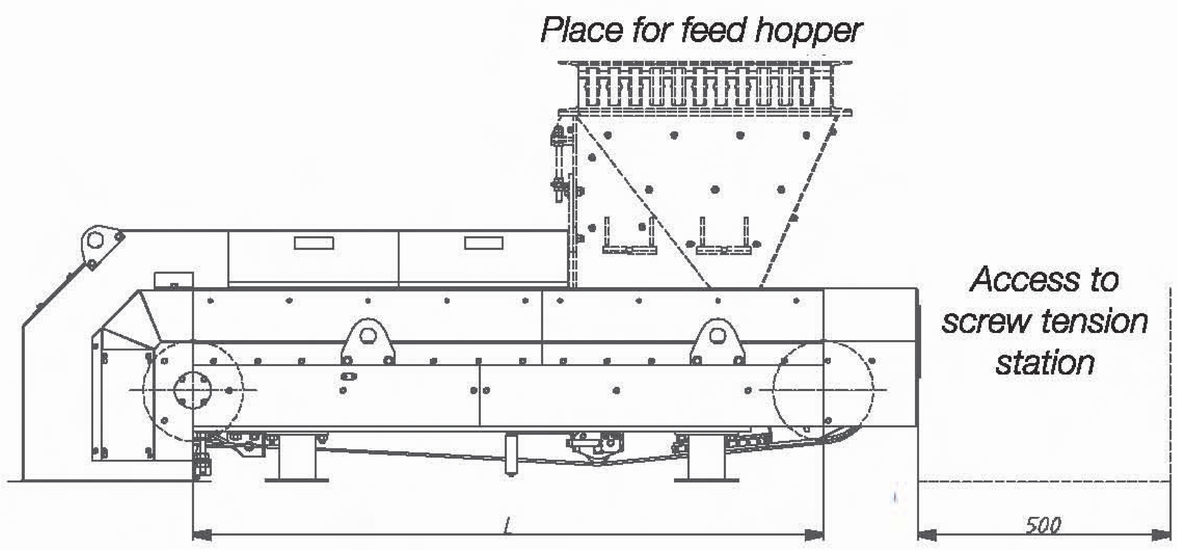

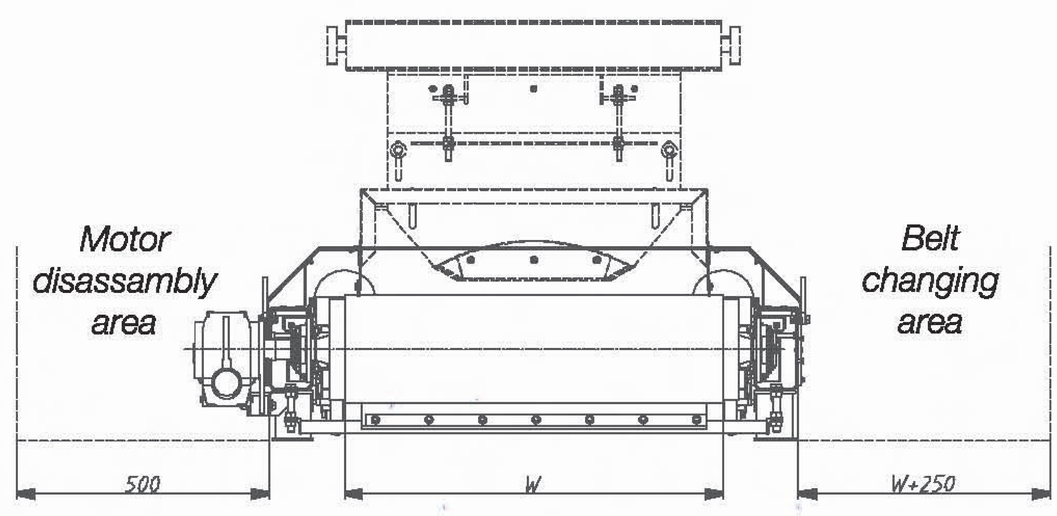

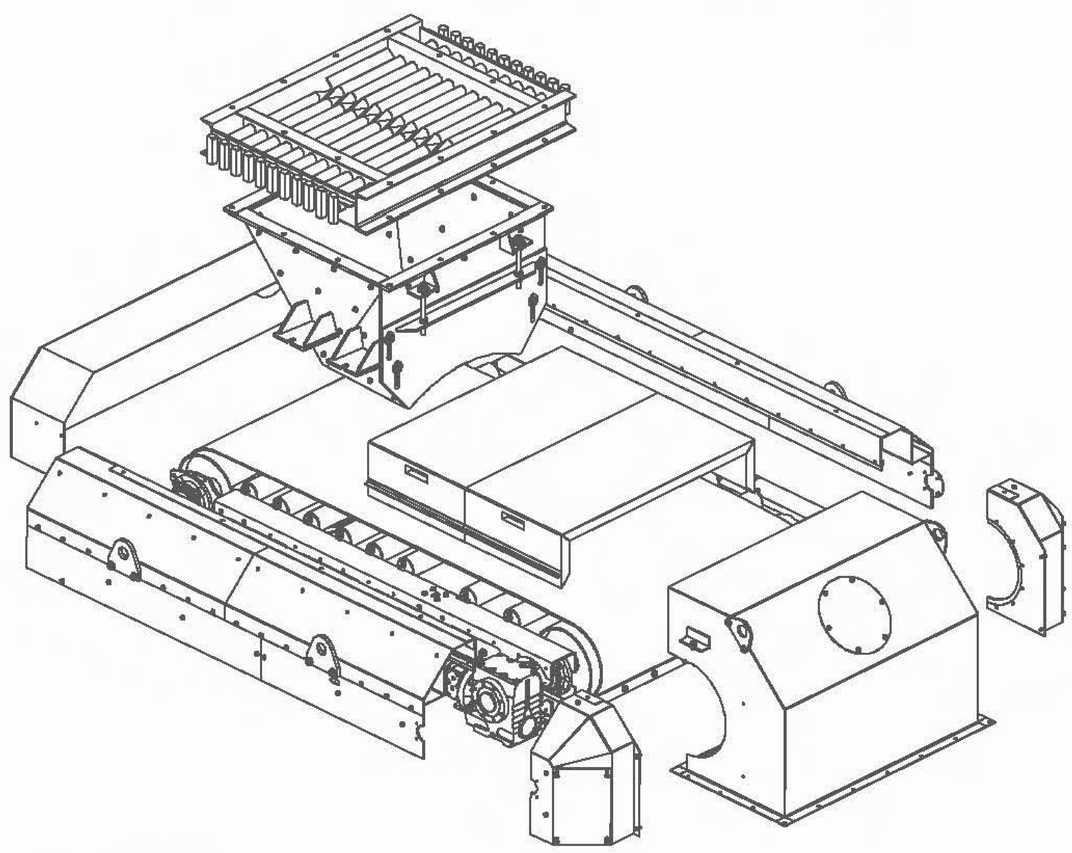

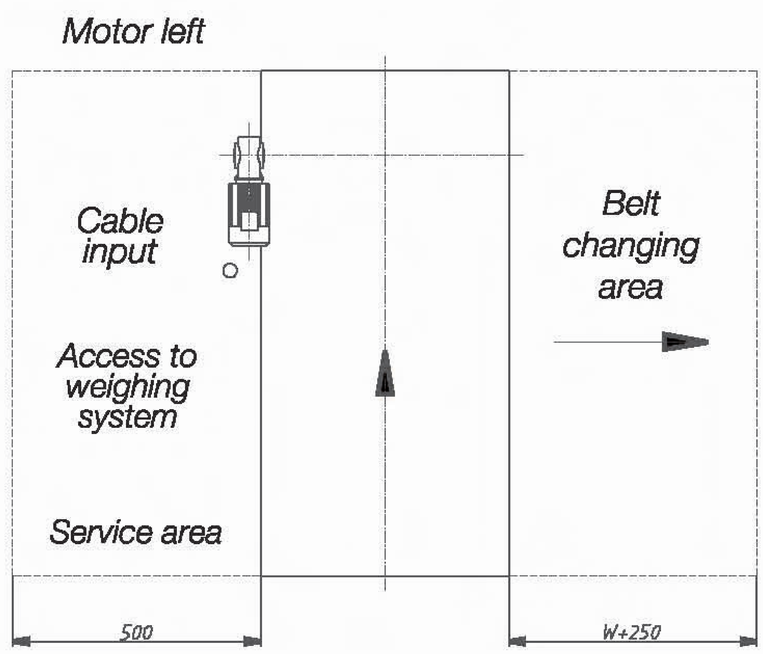

WEI WBF - B/11/2010 EN

Weiteq GmbH
Im Gotthelf 16
D - 65795 Hattersheim

PHONE : +49 (0)6145 503 99 41
FAX : +49 (0)6145 503 99 42

WEB : www.weiteq.com
MAIL : info@weiteq.com